EBOX/ Dragster Wiring Diagram

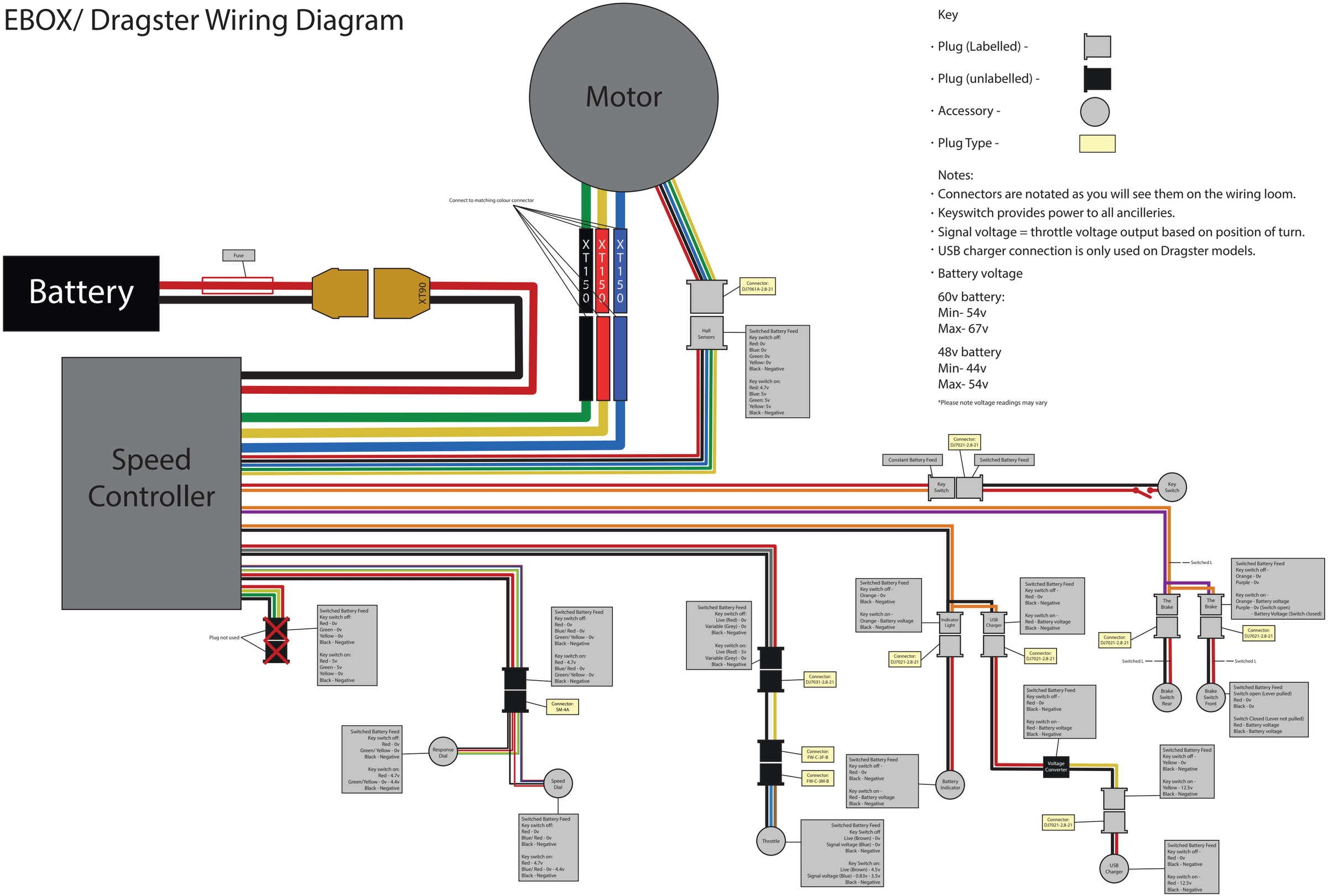

Key

- Plug (Labelled) -
- Plug (unlabelled) -
- Accessory -
- Plug Type -

Notes:

- Connectors are notated as you will see them on the wiring loom.
- Keyswitch provides power to all ancilleries.
- Signal voltage = throttle voltage output based on position of turn.
- USB charger connection is only used on Dragster models.
- Battery voltage

60v battery:
Min- 54v
Max- 67v

48v battery
Min- 44v
Max- 54v

*Please note voltage readings may vary